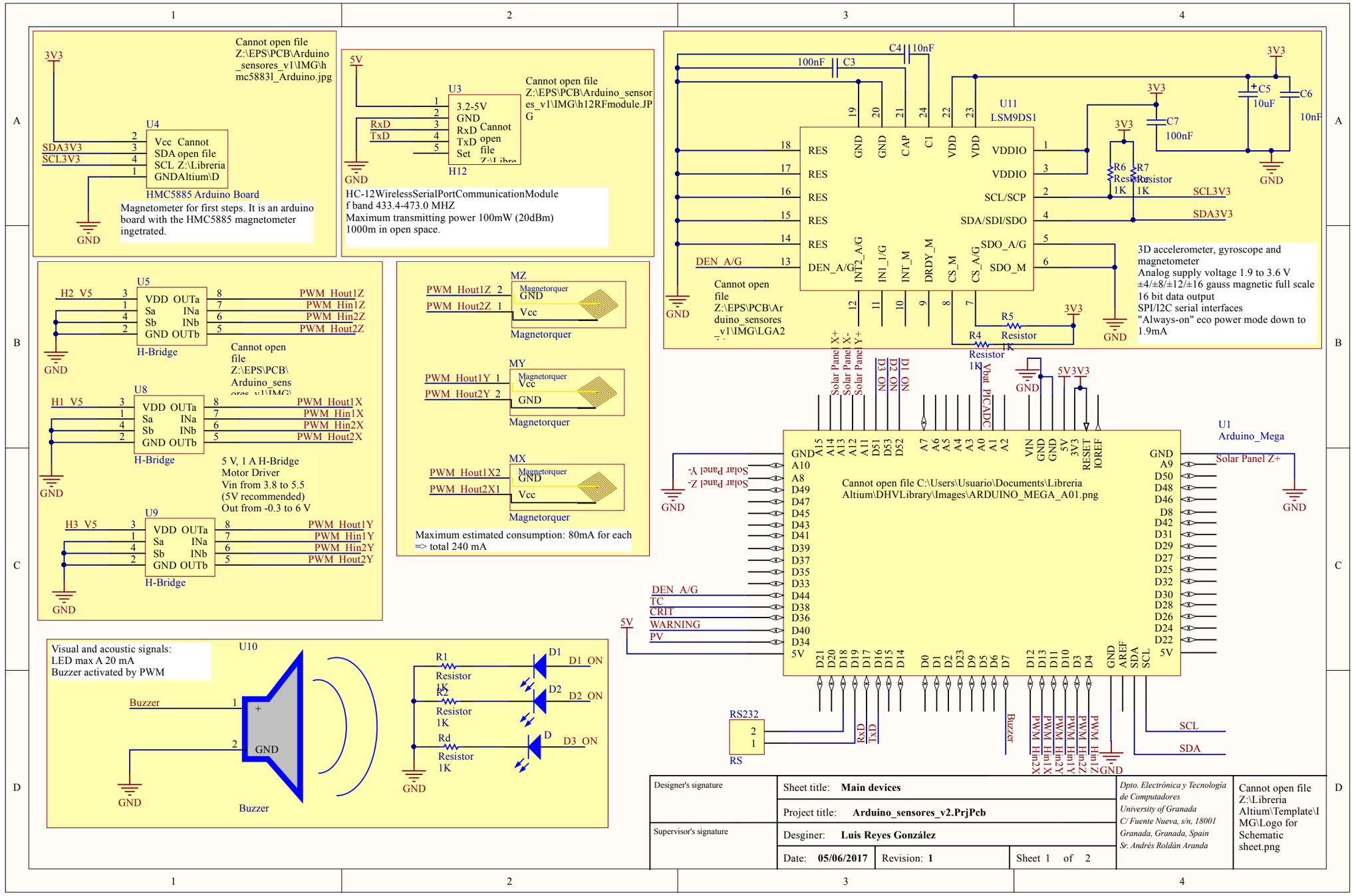

Designer's signature	Sheet title: **Main devices**		*Dpto. Electrónica y Tecnología de Computadores University of Granada C/ Fuente Nueva, s/n, 18001 Granada, Granada, Spain Sr. Andrés Roldán Aranda*
	Project title: **Arduino_sensores_v2.PrjPcb**		
Supervisor's signature	Desginer: **Luis Reyes González**		
	Date: **05/06/2017**	Revision: **1**	Sheet 1 of 2

Cannot open file Z:\Libreria Altium\Template\IMG\Logo for Schematic sheet.png

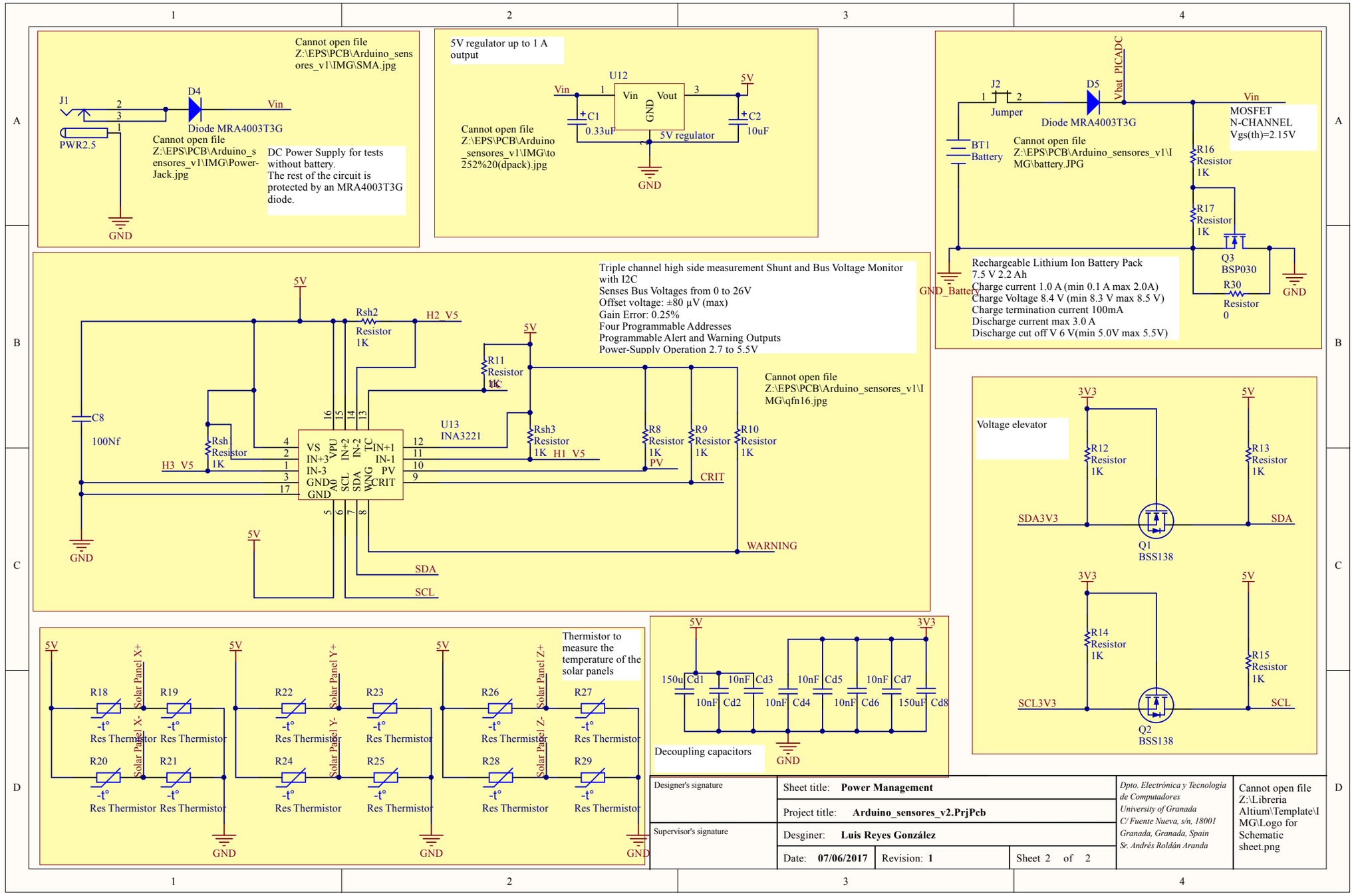

Designer's signature	Sheet title: **Power Management**		
	Project title: **Arduino_sensores_v2.PrjPcb**		
Supervisor's signature	Desginer: **Luis Reyes González**		
	Date: **07/06/2017**	Revision: **1**	Sheet 2 of 2

Dpto. Electrónica y Tecnología de Computadores
University of Granada
C/ Fuente Nueva, s/n, 18001
Granada, Granada, Spain
Sr. Andrés Roldán Aranda

Cannot open file Z:\Libreria Altium\Template\IMG\Logo for Schematic sheet.png